NSW Health

Application: Certificate of Accreditation

Sewage Management Facility

Domestic Greywater Treatment System

This Certificate of Accreditation is issued by the Secretary of the NSW Ministry of Health pursuant to Section 41(1) Local Government (General) Regulation 2021.

System: ultraGTS Domestic Greywater Treatment System

Manufacturer: Wastewater Australia Pty Ltd

Of: 5/34 Racecourse Road, Rutherford, NSW, 2320

The ultraGTS DGTS as described in Schedule 1, has been accredited as a Sewage Management Facility for use in single domestic premises in NSW. This accreditation is subject to the conditions of accreditation and permitted uses specified in Schedule 2.

P. Byfield

A/Director, Environmental Health

For Secretary (Delegation PH335)

Issued: 9 / Feb / 2026

Certificate Number: DGTS011

Expires 17 June 2030

ultraGTS Domestic Greywater Treatment System

Schedule 1: Specification

General Description

The ultraGTS greywater treatment system is designed to treat the greywater waste stream from the shower, bath, laundry and basin from a residential dwelling occupied by a maximum of 10 persons. The ultraGTS greywater treatment system is assembled within an above ground roto moulded heavy duty polyethylene tank with a capacity of 500 litres. The treatment tank contains the membrane filter module and diffuser assembly pipe system along with the working level float switch. The operation of the ultraGTS is set out below:

- Greywater enters the system via an in-ground collection sump (ultraWELL) with a design capacity of between 300-500 litres. The ultraWELL is fitted with a submersible vortex pump with a 5 metre head which transfers the greywater at regular intervals to the ultraGTS. The ultraWELL is designed with an inbuilt overflow to the sewer to cater for high loads.
- The ultraGTS is a Membrane Bio-Reactor which uses a combination of biological treatment and advanced membrane filtration. Air is introduced into the base of the ultraGTS via a course bubble aeration pipe system to ensure proper mixing and the biological treatment is achieved through the oxidation of the wastewater. The Secoh EL80 aeration pump or equivalent is used for the aeration of the wastewater and the scouring of the membranes filter.
- The membrane filter unit consists of a membrane cartridge containing 6 flat sheet membranes, 490 mm wide x 600 mm high each, with a pore size of 0.2 microns or a hollow fibre membrane module with a pore size of 0.2 microns. The membranes are self cleaning, utilising the shearing action of the diffused air and mixed liquor to scour off any built up of biomass. The transfer of the wastewater through the membrane module and the UV disinfection unit is controlled by a suction pump. The UV disinfection unit can disinfect the wastewater at a rate of 4 litres/min. The treated greywater is collected and stored in the above ground storage tank ready for internal re-use.
- The motor box, located on top of the ultraGTS, contains all the electrical components together with the air blower, the suction pump and the UV disinfection unit.

Schedule 2: Conditions of Accreditation

1. General

1.1 For each installation the owner/occupier of the premises shall make an application to the Local Council to install an ultraGTS greywater treatment system as a waste management facility in accordance with Section 68, Part C of the Local Government Act 1993 and Clause 26 of the Local Government (General) Regulation 2021.

1.2 The ultraGTS greywater treatment system shall be supplied, constructed and installed in accordance with the design as submitted and accredited by the NSW Ministry of Health.

1.3 Any modification or variations to the accredited design of the ultraGTS greywater treatment system shall be submitted for separate consideration and variation of the Certificate of Accreditation by the Secretary of the NSW Ministry of Health.

1.4 Each ultraGTS greywater treatment system shall be permanently and legibly marked on a non- corrosive metal plaque or equivalent, attached to the lid with the following information:

- The brand name of the system;
- The manufacturer's name or registered trademark;
- The month and year of manufacture.

1.5 The manufacturer shall supply the owner/occupier of the premises with an owner's manual, which sets out the care, operation, maintenance and on-going management requirements of the system.

1.6 The manufacturer shall provide the following information to each local authority where it is intended to install a greywater treatment system in their area once Departmental accreditation has been obtained:

- Statement of warranty
- Statement of service life
- Quality Assurance Certification
- Installation Manual
- Service Manual
- Owner's Manual
- Service Report Form
- Engineering Drawings on A3 forma
- Detailed Specifications
- A4 Plans
- Accreditation documentation from NSW Health.

2. Installation and Commissioning

2.1 The Local Council should require that on completion of the installation of the ultraGTS greywater treatment system, the system is inspected and checked by the manufacturer or the manufacturer's agent. The manufacturer or the agent is to certify that the system has been installed and commissioned in accordance with its design, conditions of accreditation and any additional requirements of the Local Council.

2.2 The Local Council should require that all electrical work must be carried out by a licensed electrician and in accordance with the relevant provisions of AS/NZS 3000.

3. Maintenance

3.1 The Local Council shall require the owner/occupier of the premises to enter into an annual service contract with a representative of Wastewater Australia Pty Ltd or a service contractor registered with the Local Council as an accredited person to carry out maintenance work.

3.2 The ultraGTS greywater treatment system shall be serviced at four monthly intervals in accordance with the details set out in the owner's and service manual.

3.3 At each service a check shall be made of all mechanical, electrical and functioning parts of the system including:

- Visual inspection and service of the suction pump, air blower, air diffuser and membrane assembly,
- The condition of the ultraWELL and sump pump,
- The operation of the alarm system and UV disinfection unit,
- The effective operations of the effluent re-use options.

3.4 A service report sheet, in triplicate, shall be completed for each service. The original shall be given to the owner, the duplicate forwarded to the Local Council and the triplicate retained by the service contractor.

4. On-going Management

4.1 The owner's manual prepared by the manufacturer shall contain a plan for the on-going management of the ultraGTS greywater treatment system. The plan shall include details of:

- the treatment process,
- procedures to be followed in the event of a system failure,
- emergency contact numbers,
- maintenance requirements,
- inspection and sampling procedures to be followed as part of the on-going monitoring program developed by the local authority.

4.2 Effluent from the ultraGTS greywater treatment system taken in any random grab sample shall comply with the following standard:

- BOD^5 less than 20 mg/L
- TSS less than 20 mg/L
- E. coli less than 10 cfu/100 ml

5. Permitted uses

5.1 The effluent from the ultraGTS greywater treatment system is suitable for re-use for the following purposes:

- toilet flushing;
- cold water supply to washing machine;
- garden purposes by irrigation of a type approved by the Local Council.

TITLE	MATERIAL	SIZE	FUNCTION
240V POWER CONNECTION		10A	POWER SOURCE
AERATION PIPEWORK ASSY		500x500mm	MICROFILTRATION
AIR PUMP		80L/min	TREATMENT/MEMBRANE CLEANING
CONTROL PANEL		150x190mm	CONTROLS PLANT
FILTER ASSY		500x500mm	MICROFILTRATION
FILTER BOX ASSY			
FLOAT SWITCH	PVC	1m	CONTROLS PROCESS PUMP
GREYWATER INLET	PVC	25mm PP	INLET TO PLANT
OVERFLOW TO SEWER	PVC	50mm DWV	OVERFLOW TO SEWER
SLUDGE REMOVAL VALVE	BRASS	20mm	SLUDGE REMOVAL
SUCTION PUMP			PROCESS GREYWATER
TANK			
TREATED WATER OUTLET	BRASS	15mm MALE	TREATED WATER FOR STORAGE
UV DISINFECTION	STAINLESS STEEL	4L/min	DISINFECTION

Refer to drawing for location of all components

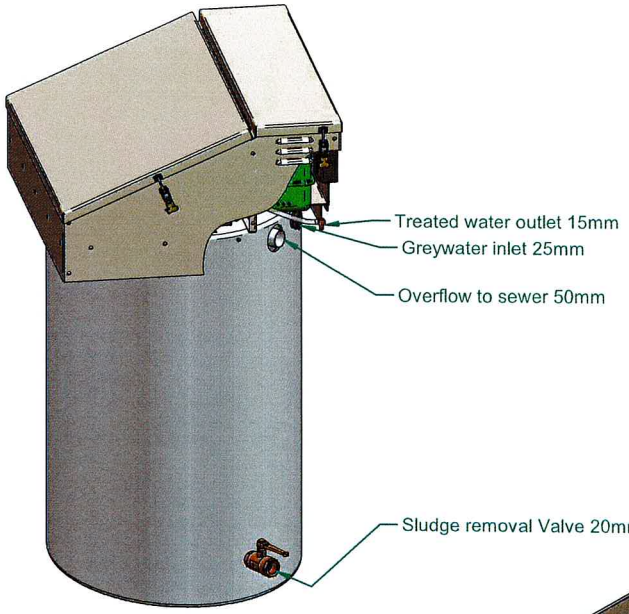

ultra Greywater Treatment System GTS

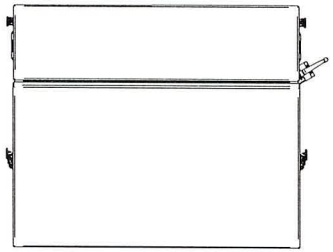

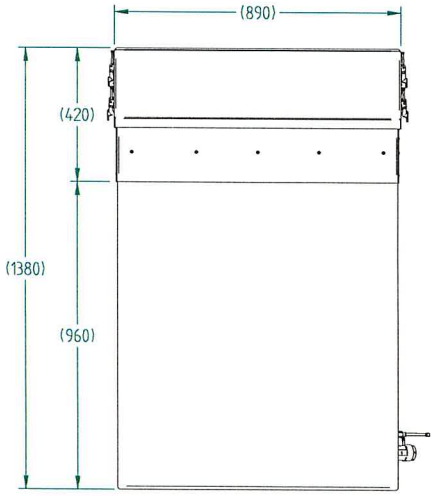

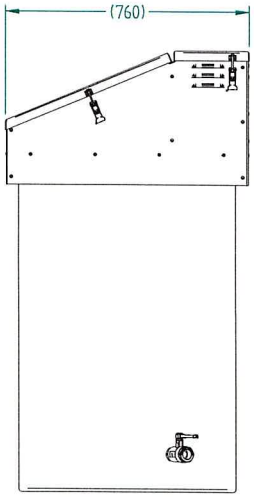

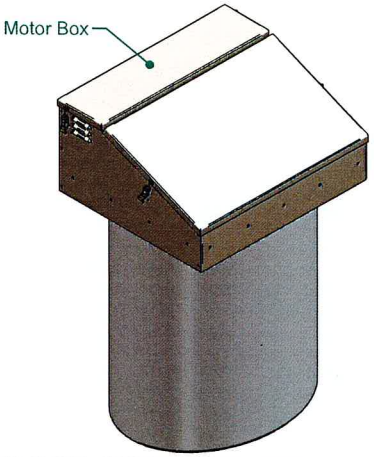

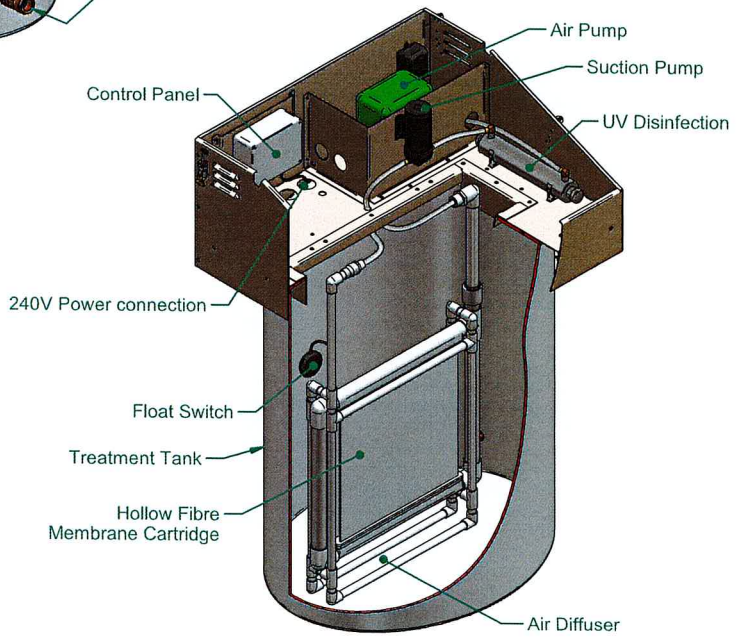

ACCREDITED

9 FEB 2026

NSW MINISTRY OF HEALTH

wastewater Australia

COPYRIGHT
THIS DRAWING AND INFORMATION CONTAINED WITHIN REMAINS THE COPYRIGHT PROPERTY OF WASTE WATER AUSTRALIA PTY LTD AND CANNOT BE COPIED OR REPRODUCED WITHOUT WRITTEN PERMISSION

UNLESS OTHERWISE SPECIFIED ALL DIMENSIONS ARE IN MILLIMETRES

DATE PLOTTED 18/08/2020
SCALE DO NOT SCALE
DRAWING LAST MODIFIED BY Peter McKay

PROJECT ultraGTS
TITLE MAIN ASSY CERTIFICATION DRAWING
COAT/TREAT. -
PART# 1118-010
VERSION 2
SHEET SIZE A3
SHEET No. 1 OF 1